Work Order ID 51309

August 17, 2009 10:56:58 AM

Item ID: D3542-1 G4
Revision ID: A
Item Name: Bracket

Accept

Setup Start
Stop

Start Date: 18/08/2009 **Start Qty:** 10.00
Required Date: 27/08/2009 **Req'd Qty:** 10.00
Reference: 09.08.17

Cust Item ID:
Customer:

Run Start
Stop

Approvals: **Process Plan:** _____ **Date:** _____ **Tooling:** _____ **Date:** _____
QC: _____ **Date:** _____ **SPC (Y/N):** _____ **Date:** _____

Sequence ID/ Work Center ID	Operation Description	Set Up/ Run Hours	Draw Number	Draw Rev.	Plan Code	Accept Qty	Reject Qty	Reject Number	Insp. Stamp
Draw Nbr	**Revision Nbr**								
D3542	Rev A								
100	BAND SAW	0.00				10	Ø		
Bandsaw	**Memo**	0.00							
Jeaspa Bandsaw	Cut blank 4.0" long								
	M109058	G.A 09/08/17							
110	HAAS CNC VERTICAL MACHINING #1	0.00				10	Ø		
HAAS 1	**Memo**	0.00							
HAAS CNC vertical machine #1	1- Mill as per Folio FA684 Rev: A & Dwg D3542 Rev: A ☐2-Deburr per dwg D3443								
	G.A 09/08/17 / SF 09/08/17								
120	QC2- Inspect parts off machine FAI/FAIB	0.00				10	Ø		
QC	**Memo**	0.00							
Quality Control	G.A 09/08/17								

Work Order ID 51309

August 17, 2009 10:56:58 AM

Item ID: D3542-1
Revision ID: A
Item Name: Bracket

Accept

Setup Start
Stop

Start Date: 18/08/2009 **Start Qty:** 10.00
Required Date: 27/08/2009 **Req'd Qty:** 10.00
Reference:

Cust Item ID:
Customer:

Run Start
Stop

Approvals: **Process Plan:** _____ **Date:** _____ **Tooling:** _____ **Date:** _____
QC: _____ **Date:** _____ **SPC (Y/N):** _____ **Date:** _____

Sequence ID/ Work Center ID	Operation Description	Set Up/ Run Hours	Draw Number	Draw Rev.	Plan Code	Accept Qty	Reject Qty	Reject Number	Insp. Stamp
130 QC Quality Control	QC8- Inspect parts - second check Memo	0.00 0.00	MK 09/08/20			10	Ø		
140 HandFinish Hand Finishing	Chemical Conversion Coat per QSI005 4.1 Memo	0.00 0.00	09/08/20			10	Ø		
150 Powdercoat Powder Coating	Grey Sandtex(Ref:4.3.5.6) per QSI005 4.3 M109091 Memo *****ENSURE TO MASK INSIDE BORE*****☐START TIME: 92:40pm ☐OVEN TEMPERATURE: 11:10pm ☐FINISH TIME: 320°F	0.00 0.00	09/08/20			10	Ø		

Work Order ID 51309

August 17, 2009 10:56:58 AM

Item ID: D3542-1
Revision ID: A
Item Name: Bracket

Accept

Setup Start
Stop

Start Date: 18/08/2009 **Start Qty:** 10.00
Required Date: 27/08/2009 **Req'd Qty:** 10.00
Reference:

Cust Item ID:
Customer:

Run Start
Stop

Approvals: **Process Plan:** _____ **Date:** _____ **Tooling:** _____ **Date:** _____
QC: _____ **Date:** _____ **SPC (Y/N):** _____ **Date:** _____

Sequence ID/ Work Center ID	Operation Description	Set Up/ Run Hours	Draw Number	Draw Rev.	Plan Code	Accept Qty	Reject Qty	Reject Number	Insp. Stamp
160	QC3- Inspect Part Finish	0.00							
QC	Memo	0.00							
Quality Control									
170	Identify as per dwg & Stock Location: 245	0.00							
Packaging	Memo	0.00							
Packaging									
180	QC21- Final Inspection - Work Order Release	0.00							
QC	Memo	0.00							
Quality Control									

=> S 09/08/20

(40) ¢

9/8/20 (100)

09/08/24

MF 09-08-21

Status	Item ID	Rev	Name	Quantity Per	UOM	Sort	Route Seq ID	Scrap %	Comments	Date Last Mod	Add Date
✓	M6061T6B30000X01.500		6061-T6 Bar 3.00 x 1.50	0.3333333	f	1	100	0 %		17/08/2009...	17/08/2009

D.A 09/08/17 M109058 (10)

DART AEROSPACE LTD	Work Order:	51309
Description: Bracket	Part Number:	D3542-1
Inspection Dwg: D3542 **Rev:** A		Page 1 of 1

FIRST ARTICLE INSPECTION CHECKLIST

[X] First Article [ ] Prototype

Drawing Dimension	Tolerance	Actual Dimension	Accept	Reject	Method of Inspection	Comments
Ø2.010	+0.005/-0.000	Ø2.013	✓			
Ø2.50	+0.012/-0.001	Ø2.499	✓			
3.75	+/-0.030	3.749	✓			
2.50	+/-0.010	2.498	✓			
1.00	+/-0.010	1.000	✓			
0.06 x 45°	+/-0.030 x 0.5°	0.053 x45°	✓			
Ø0.266	+0.006/-0.001	Ø0.269	✓			
1.00	+/-0.030	0.998	✓			
0.50	+/-0.030	0.498	✓			
0.500	+/-0.010	0.499	✓			

Measured by:	Y. A	Audited by:		Prototype Approval:	N/A
Date:	09/08/17	Date:		Date:	N/A

Rev	Date	Change	Revised by	Approved
A	07.06.13	New Issue	KJ/JLM	

DESIGN	DRAWN BY	DART AEROSPACE LTD HAWKESBURY, ONTARIO, CANADA	
CHECKED	APPROVED	DRAWING NO. D3542	REV. A SHEET 1 OF 1
DATE 06.11.27		TITLE BRACKET	SCALE 2:3

REV	DATE	DESCRIPTION
A	06.11.27	NEW ISSUE

RELEASED
07.04.02

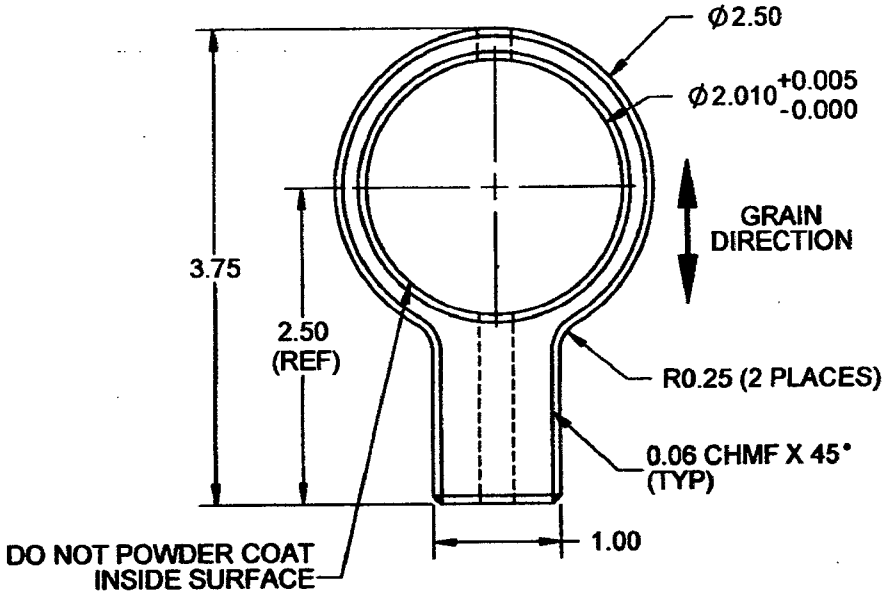

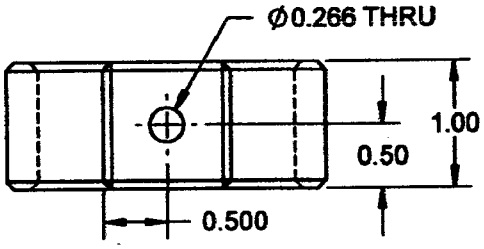

D3542-1 BRACKET

51309

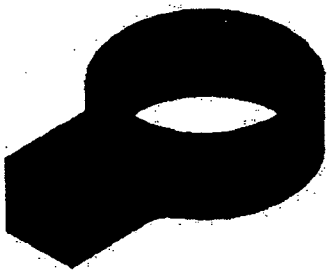

NOTES:
1) MATERIAL: 6061-T6 ALUMINUM BAR PER QQ-A-225/8 OR QQ-A-200/8 OR AMS 4117/4128/4115/4116/4160 (REF DART SPEC M6061T6B)
2) FINISH: CHEMICAL CONVERSION COAT PER DART QSI 005 4.1
POWDER COAT GREY SANDTEX (4.3.5.6) PER DART QSI 005 4.3 EXCEPT WHERE NOTED
3) TOLERANCES ARE PER DART QSI 018 UNLESS OTHERWISE NOTED
4) IDENTIFY WITH DART P/N "D3542-1" USING FINE POINT PERMANENT INK MARKER
5) ALL DIMENSIONS ARE IN INCHES UNLESS OTHERWISE NOTED
6) BREAK ALL SHARP EDGES 0.005 TO 0.010 MAX

COPYRIGHT © 2006 BY DART AEROSPACE LTD

THIS DOCUMENT IS PRIVATE AND CONFIDENTIAL AND IS SUPPLIED ON THE EXPRESS CONDITION THAT IT IS NOT TO BE USED FOR ANY PURPOSE OR COPIED OR COMMUNICATED TO ANY OTHER PERSON WITHOUT WRITTEN PERMISSION FROM DART AEROSPACE LTD.